GenCat

Particulate Filter

UGET3 D600 <441kW/600bhp*

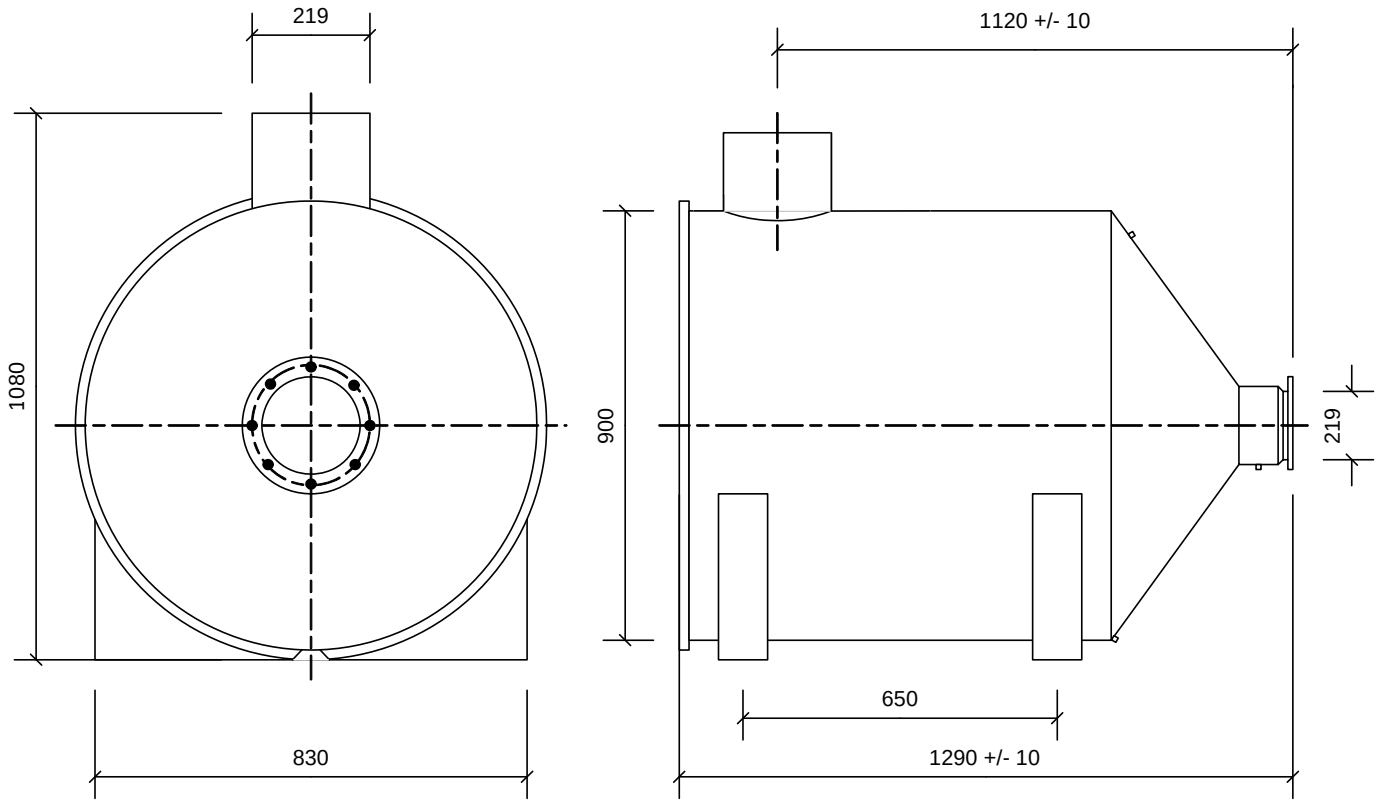

All dimensions in mm
Not to scale

The **UGET 3** diesel particulate filter collects the particulate matter in the exhaust stream by means of physical filtration. Effective from start-up, the filter is capable of retaining particles as small as 0.3 microns, trapping all PM10 and PM2.5 matter and is capable of reducing up to 85% of particulate matter (PM) in the exhaust stream. The UGET 3 is a non-regenerative type; it has a finite capacity of 1000 grams before the filter cartridge requires replacing.

Features

- Reduces particulate matter (PM) by up to 85%
- Operates from engine start-up
- Suitable for standby generator sets, low-usage forklift trucks, side-loaders, excavators etc.
- Bypass system available

Filter Life

300-350 hours depending on condition and maintenance of the engine.

Back pressure for the UGET Particulate Filter

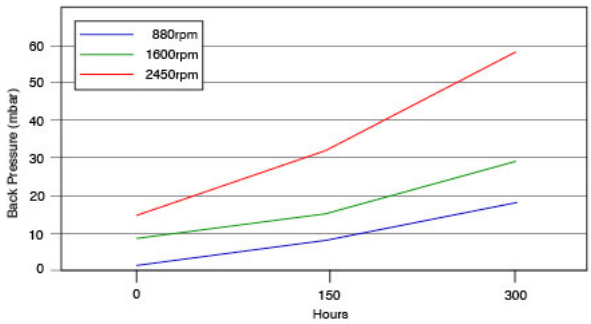

Applications

The filter is suited to low usage applications such as standby generator sets or on equipment being used for short periods at a time, it is particularly suited to equipment being used in confined spaces. The filters can be bypassed, so that it is only used when required, i.e. inside tunnels and warehouses, electronic or manual bypass valves are available.

Fitment

As the maximum operating temperature of the filter is 350°C, it is recommended that fitment of the filter is as far from the engine as possible, to avoid overheating. The filter can be bolted to the frame or body and simply attached with a length of flexible exhaust pipe. The filter cartridge is fire resistant and incorporates a heat shield for protection from burns.

Maintenance

There is minimal maintenance required, at the end of the filter life it is removed and simply replaced with a new one. Failure to do so will cause the filter to block, which in turn can damage or destroy the filter itself or cause damage to the engine due to increased backpressure.

Besides a wide range of standard models, special models can be produced for engines with any power rating.

***For Turbocharged engines multiply engine power by 1.3 first**

Copyright 2010 © GenCat Ltd